# Bain d'Or

# DECO

Specifications:

Type: Basin mixer

Item code: MX-14703-A00

Material: Brass Body & Zinc Alloy Handle
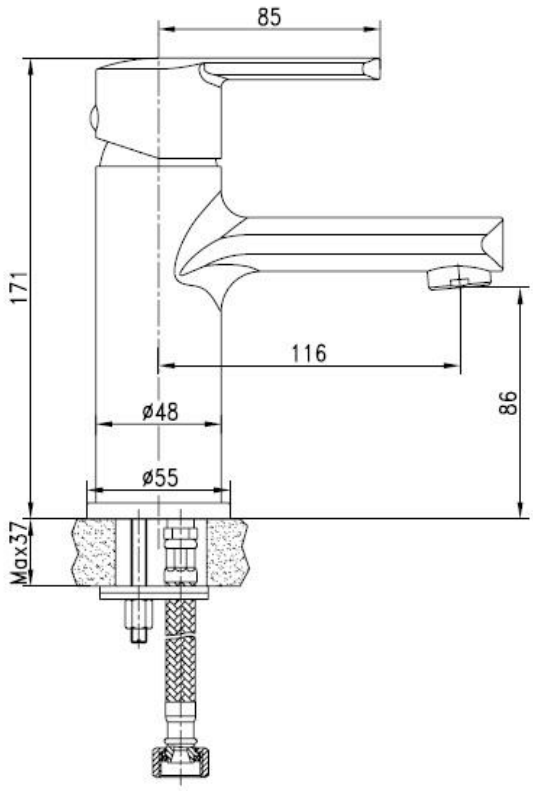
Line Drawing: